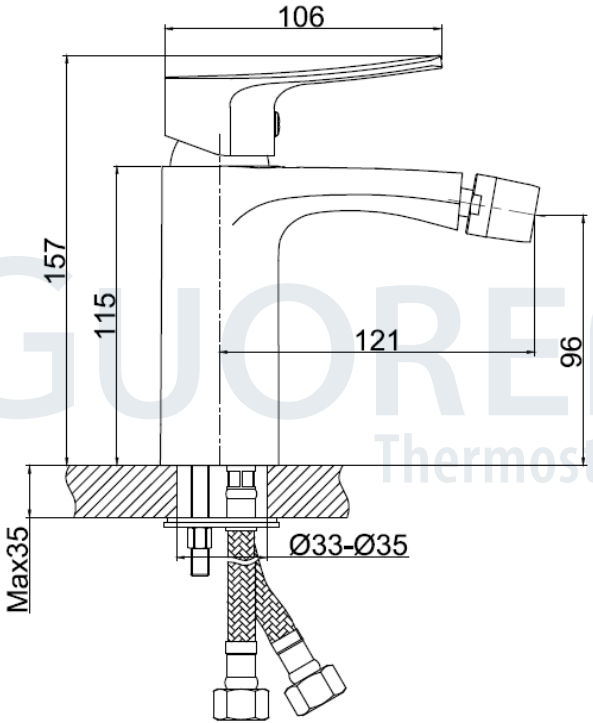

GUOREN
Thermostatic