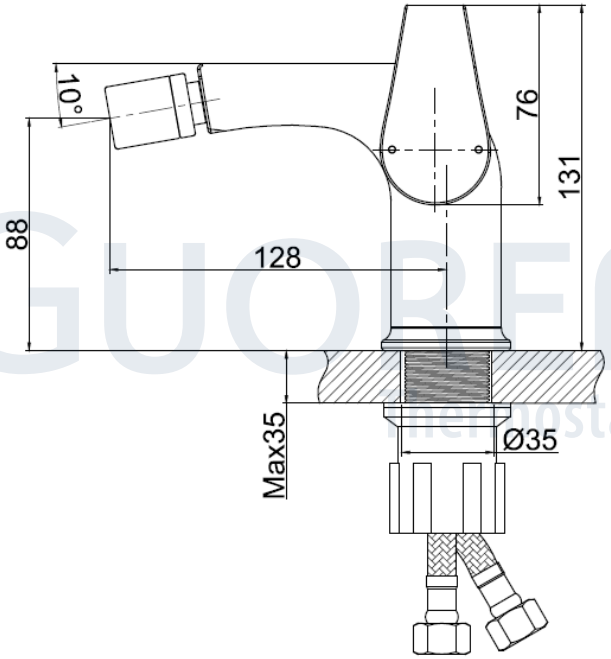

GUOBEN
thermostatic